Incremental encoder 2500 PPR, Ø50 mm housing, Ø8 mm shaft, line driver output

EOI-50-2500-8-LD · Line driver · IP50 · 5…26 V DC



FEATURES

- Optical incremental encoder, Ø8 mm solid shaft, 2500 PPR
- Line driver output: A, /A, B, /B, Z, /Z
- Supply 5…26 V DC · max. response frequency 100 kHz
- Ø50 mm housing · IP50 · max. 6000 rpm

WIRING

Red	+V
Black	0 V
Blue	A
Green	B
Yellow	Z
Violet	/A
Orange	/B
Brown	/Z
Shield	shield

Use twisted pairs for A–/A, B–/B and Z–/Z and connect the shield to ground. Output level follows the supply: RS422 compatible with 5 V supply.

GENERAL

Encoder type	Incremental, solid shaft
Resolution	2500 PPR
Output circuit	Line driver
Output signals	A, /A, B, /B, Z, /Z
Max. response frequency	100 kHz
Phase shift A/B	90° ± 45°
Direction of rotation	A leads B clockwise (viewed from the shaft)

ELECTRICAL

Supply voltage	5…26 V DC
Current consumption (max.)	60 mA
Output level (high / low)	Follows the supply (differential)
Compatibility	RS422 compatible with 5 V supply
Output current (max.)	40 mA
Rise/fall time (max.)	2 µs
Reverse polarity protection	Yes
Max. cable length	100 m at 100 kHz

MECHANICAL

Housing diameter (max.)	50 mm
Body diameter	50 mm
Total length incl. shaft	56 mm
Shaft diameter	8 mm
Shaft diameter tolerance	0 / −0.02
Shaft length from mounting face	21 mm
Shaft flat length	10 mm
Centring spigot diameter	30 mm
Centring spigot tolerance	0 / −0.02
Mounting hole circle (PCD)	40 mm
Mounting holes	3 × M3 at 120°, depth 5 mm
Max. speed	6000 rpm
Starting torque (max.)	30 gf·cm

Specifications subject to change without notice. © 2026 Mekelson Components S.L.

MECHANICAL

Max. axial shaft load	1 kg
Max. radial shaft load	2 kg
Weight (max.)	200 g
Cable exit	Radial
Cable diameter	4.5 mm
Cable length	1 m

ENVIRONMENT

Operating temperature	0…60 °C
Operating humidity (non-condensing)	35…90 % RH
Storage temperature	−20…70 °C
Protection class	IP50
Vibration	10 g, 10–55 Hz, 1.5 mm, 2 h
Shock	20 g, 11 ms

COMPLIANCE AND QUALITY

CE marking	EMC 2014/30/EU (EN 61000-6-3, EN 61000-6-1)
RoHS	2011/65/EU incl. (EU) 2015/863
REACH (SVHC)	< 0.1 % by weight
Manufacturer's quality system	ISO 9001:2015

ARTICLE CODE EOI-50-2500-8-LD

EOI	Optical incremental encoder
50	Housing Ø50 mm · options: 38, 44, 50
2500	2500 pulses per revolution · options: 5…3600
8	Shaft Ø8 mm · options: 6, 8
LD	Line driver · options: PP push-pull, LD line driver

ORDERING INFORMATION

Article	EOI-50-2500-8-LD
Series	EOI-50-8 – Encoder Ø50 mm, 8 mm shaft
Country of origin	Taiwan

OUTPUT SIGNALS

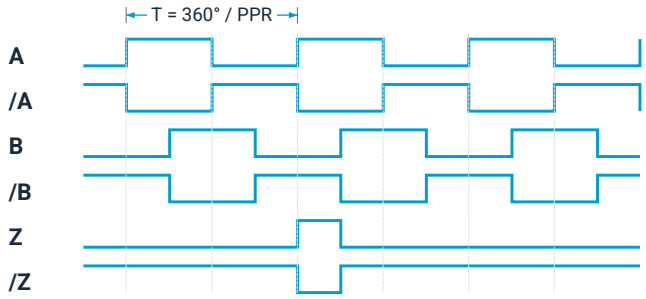

Phase shift A–B: 90° ± 45° (T/4 ± T/8). Z: one high pulse per revolution. Clockwise rotation viewed from the shaft: A leads B.

OUTPUT CIRCUIT

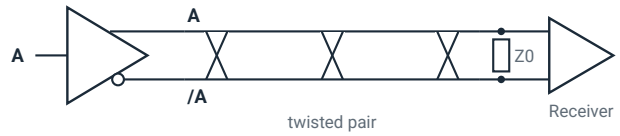

Same circuit for A–/A, B–/B and Z–/Z. Max. output current 40 mA; max. cable length 100 m at 100 kHz. Terminate the line at the receiver (Z0).

DIMENSIONS

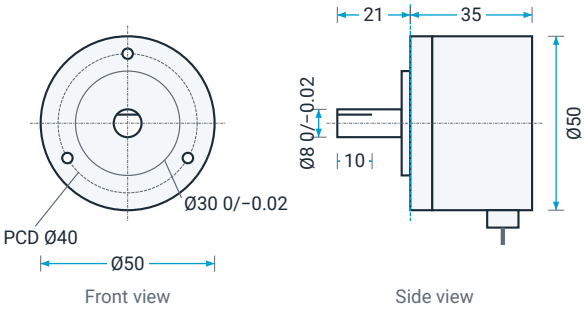

Mounting holes: 3 × M3 at 120°, depth 5 mm · Radial cable Ø4.5 mm, 1 m · Dimensions in mm. Schematic drawing, not to scale.

Specifications subject to change without notice. © 2026 Mekelson Components S.L.

RESOLUTIONS IN SERIES EOI-50-8

PPR	Push-pull	Line driver
5	EOI-50-5-8-PP	EOI-50-5-8-LD
10	EOI-50-10-8-PP	EOI-50-10-8-LD
50	EOI-50-50-8-PP	EOI-50-50-8-LD
100	EOI-50-100-8-PP	EOI-50-100-8-LD
200	EOI-50-200-8-PP	EOI-50-200-8-LD
300	EOI-50-300-8-PP	EOI-50-300-8-LD
360	EOI-50-360-8-PP	EOI-50-360-8-LD
400	EOI-50-400-8-PP	EOI-50-400-8-LD
500	EOI-50-500-8-PP	EOI-50-500-8-LD
600	EOI-50-600-8-PP	EOI-50-600-8-LD
900	EOI-50-900-8-PP	EOI-50-900-8-LD
1000	EOI-50-1000-8-PP	EOI-50-1000-8-LD
1024	EOI-50-1024-8-PP	EOI-50-1024-8-LD
1200	EOI-50-1200-8-PP	EOI-50-1200-8-LD
1500	EOI-50-1500-8-PP	EOI-50-1500-8-LD
1800	EOI-50-1800-8-PP	EOI-50-1800-8-LD
2000	EOI-50-2000-8-PP	EOI-50-2000-8-LD
2048	EOI-50-2048-8-PP	EOI-50-2048-8-LD
2500	**EOI-50-2500-8-PP**	**EOI-50-2500-8-LD**

Other outputs on request: NPN/PNP open collector.

Other resolutions, cable lengths and connectors on request.

Download 3D model (STEP): EOI-50-8_1.step

Specifications subject to change without notice. © 2026 Mekelson Components S.L.