# Incremental encoder 2048 PPR, Ø50 mm housing, Ø8 mm shaft, line driver output

EOI-50-2048-8-LD · Line driver · IP50 · 5…26 V DC




## FEATURES

- Optical incremental encoder, Ø8 mm solid shaft, 2048 PPR
- Line driver output: A, /A, B, /B, Z, /Z
- Supply 5…26 V DC · max. response frequency 100 kHz
- Ø50 mm housing · IP50 · max. 6000 rpm

## WIRING

| | |
|---|---|
| **Red** | +V |
| **Black** | 0 V |
| **Blue** | A |
| **Green** | B |
| **Yellow** | Z |
| **Violet** | /A |
| **Orange** | /B |
| **Brown** | /Z |
| **Shield** | shield |

Use twisted pairs for A−/A, B−/B and Z−/Z and connect the shield to ground. Output level follows the supply: RS422 compatible with 5 V supply.

## GENERAL

| | |
|---|---|
| Encoder type | Incremental, solid shaft |
| Resolution | 2048 PPR |
| Output circuit | Line driver |
| Output signals | A, /A, B, /B, Z, /Z |
| Max. response frequency | 100 kHz |
| Phase shift A/B | 90° ± 45° |
| Direction of rotation | A leads B clockwise (viewed from the shaft) |

## ELECTRICAL

| | |
|---|---|
| Supply voltage | 5…26 V DC |
| Current consumption (max.) | 60 mA |
| Output level (high / low) | Follows the supply (differential) |
| Compatibility | RS422 compatible with 5 V supply |
| Output current (max.) | 40 mA |
| Rise/fall time (max.) | 2 µs |
| Reverse polarity protection | Yes |
| Max. cable length | 100 m at 100 kHz |

## MECHANICAL

| | |
|---|---|
| Housing diameter (max.) | 50 mm |
| Body diameter | 50 mm |
| Total length incl. shaft | 56 mm |
| Shaft diameter | 8 mm |
| Shaft diameter tolerance | 0 / −0.02 |
| Shaft length from mounting face | 21 mm |
| Shaft flat length | 10 mm |
| Centring spigot diameter | 30 mm |
| Centring spigot tolerance | 0 / −0.02 |
| Mounting hole circle (PCD) | 40 mm |
| Mounting holes | 3 × M3 at 120°, depth 5 mm |
| Max. speed | 6000 rpm |
| Starting torque (max.) | 30 gf·cm |


Specifications subject to change without notice. © 2026 Mekelson Components S.L.

## MECHANICAL

| | |
|---|---|
| Max. axial shaft load | 1 kg |
| Max. radial shaft load | 2 kg |
| Weight (max.) | 200 g |
| Cable exit | Radial |
| Cable diameter | 4.5 mm |
| Cable length | 1 m |

## ENVIRONMENT

| | |
|---|---|
| Operating temperature | 0…60 °C |
| Operating humidity (non-condensing) | 35…90 % RH |
| Storage temperature | −20…70 °C |
| Protection class | IP50 |
| Vibration | 10 g, 10–55 Hz, 1.5 mm, 2 h |
| Shock | 20 g, 11 ms |

## COMPLIANCE AND QUALITY

| | |
|---|---|
| CE marking | EMC 2014/30/EU (EN 61000-6-3, EN 61000-6-1) |
| RoHS | 2011/65/EU incl. (EU) 2015/863 |
| REACH (SVHC) | < 0.1 % by weight |
| Manufacturer's quality system | ISO 9001:2015 |

## ARTICLE CODE EOI-50-2048-8-LD

| | |
|---|---|
| EOI | Optical incremental encoder |
| 50 | Housing Ø50 mm · options: 38, 44, 50 |
| 2048 | 2048 pulses per revolution · options: 5…3600 |
| 8 | Shaft Ø8 mm · options: 6, 8 |
| LD | Line driver · options: PP push-pull, LD line driver |

## ORDERING INFORMATION

| | |
|---|---|
| Article | EOI-50-2048-8-LD |
| Series | EOI-50-8 – Encoder Ø50 mm, 8 mm shaft |
| Country of origin | Taiwan |

## OUTPUT SIGNALS

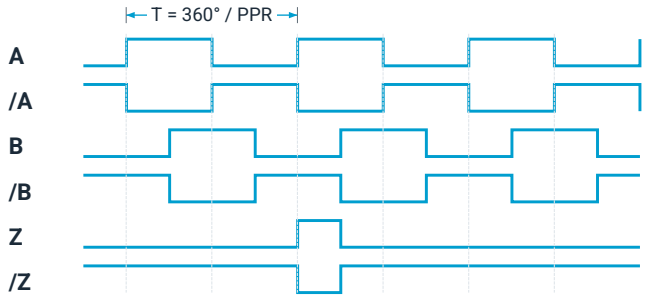


Phase shift A–B: 90° ± 45° (T/4 ± T/8). Z: one high pulse per revolution. Clockwise rotation viewed from the shaft: A leads B.

## OUTPUT CIRCUIT

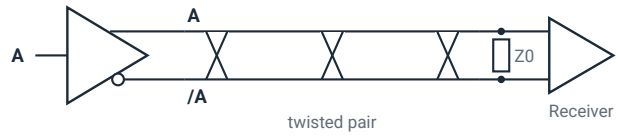


Same circuit for A–/A, B–/B and Z–/Z. Max. output current 40 mA; max. cable length 100 m at 100 kHz. Terminate the line at the receiver (Z0).

## DIMENSIONS

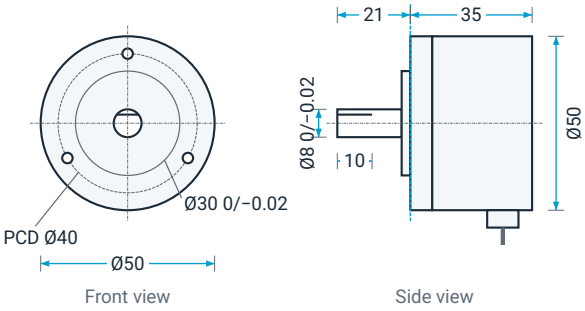


Mounting holes: 3 × M3 at 120°, depth 5 mm · Radial cable Ø4.5 mm, 1 m · Dimensions in mm. Schematic drawing, not to scale.


Specifications subject to change without notice. © 2026 Mekelson Components S.L.

## RESOLUTIONS IN SERIES EOI-50-8

| PPR | Push-pull | Line driver |
|---|---|---|
| 5 | EOI-50-5-8-PP | EOI-50-5-8-LD |
| 10 | EOI-50-10-8-PP | EOI-50-10-8-LD |
| 50 | EOI-50-50-8-PP | EOI-50-50-8-LD |
| 100 | EOI-50-100-8-PP | EOI-50-100-8-LD |
| 200 | EOI-50-200-8-PP | EOI-50-200-8-LD |
| 300 | EOI-50-300-8-PP | EOI-50-300-8-LD |
| 360 | EOI-50-360-8-PP | EOI-50-360-8-LD |
| 400 | EOI-50-400-8-PP | EOI-50-400-8-LD |
| 500 | EOI-50-500-8-PP | EOI-50-500-8-LD |
| 600 | EOI-50-600-8-PP | EOI-50-600-8-LD |
| 900 | EOI-50-900-8-PP | EOI-50-900-8-LD |
| 1000 | EOI-50-1000-8-PP | EOI-50-1000-8-LD |
| 1024 | EOI-50-1024-8-PP | EOI-50-1024-8-LD |
| 1200 | EOI-50-1200-8-PP | EOI-50-1200-8-LD |
| 1500 | EOI-50-1500-8-PP | EOI-50-1500-8-LD |
| 1800 | EOI-50-1800-8-PP | EOI-50-1800-8-LD |
| 2000 | EOI-50-2000-8-PP | EOI-50-2000-8-LD |
| **2048** | **EOI-50-2048-8-PP** | **EOI-50-2048-8-LD** |
| 2500 | EOI-50-2500-8-PP | EOI-50-2500-8-LD |

Other outputs on request: NPN/PNP open collector.

Other resolutions, cable lengths and connectors on request.

Download 3D model (STEP): EOI-50-8_1.step


Specifications subject to change without notice. © 2026 Mekelson Components S.L.